HE FILTRATION ENGINEERING S.L.
FILTRACION Y DEPURACION DE AIRE

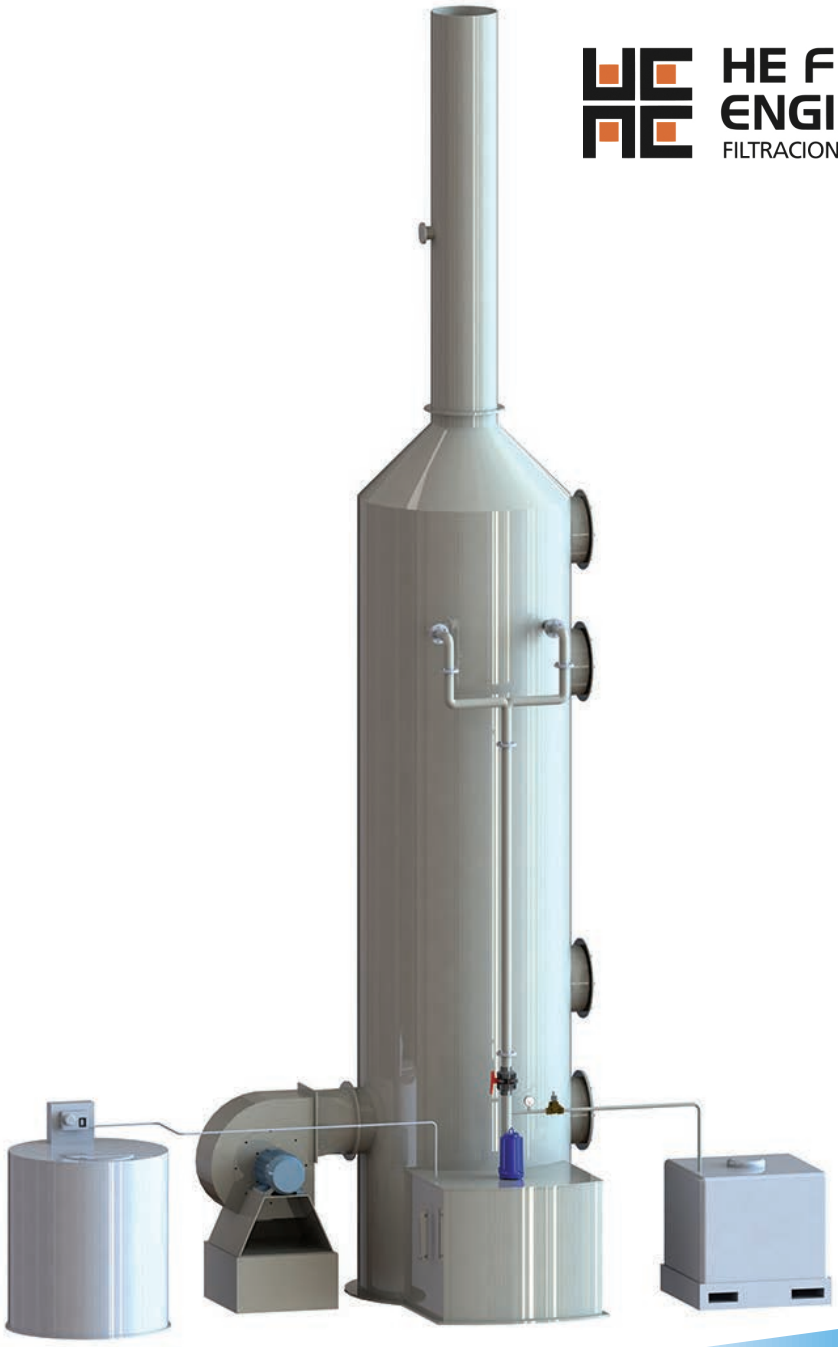

# SC Scrubber

Scrubber

*A cleaner world.*

# Scrubber

1. Demister
2. Nebulizer
3. Fillings element
4. Fan
5. Recerculation pump
6. Backwater tank
7. Level indicator
8. Wastewater tank
9. Reagent renewal system

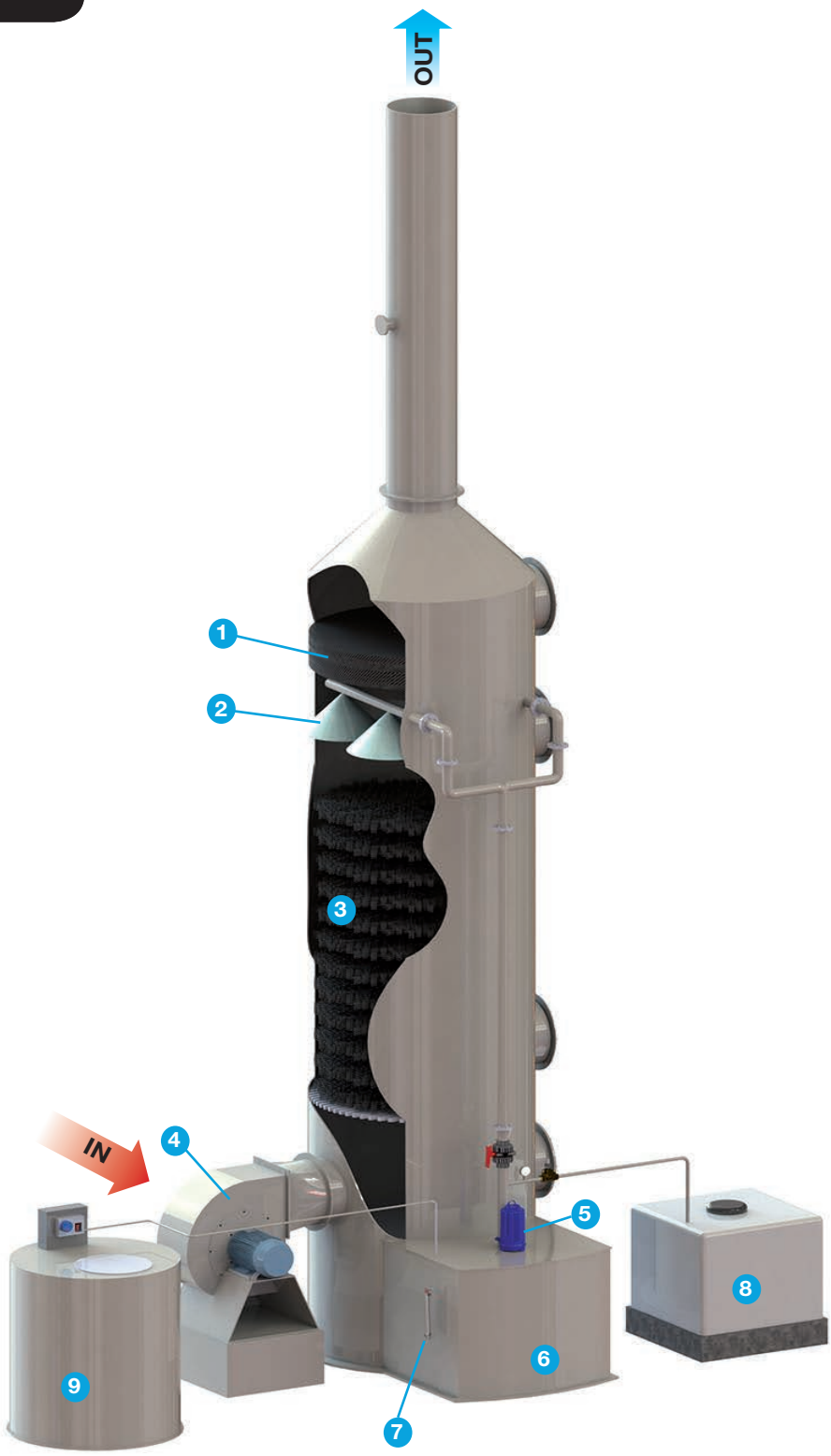


The scrubber is a wet collection device which involves the use of a liquid (water or solution with appropriate reagent ) for the mechanical separation or chemical neutralization of contaminant particles from the gas stream.They can be made of polypropylene (PP ) , PVC, polyethylene HD or stainless steel and they are widely used for the organic deodorization and for the removal of acid or alkali gases.

## Il functionamet

The removal of pollutants  mainly occur by a process of impingement of wetted particles on collecting surfaces, followed by their removal from the surfaces by a countercurrent flush with a liquid - water or reagent solution properly proportionated.
The system recirculates the same washing liquid up to its saturation.
Once purified , the air pass through a demister stage, which have the function to eliminate any possible “carryover effects” and then is emitted into the atmosphere.
The gas stream is conveyed through the scrubber by a centrifugal fan properly dimensioned.
The plants are supplied with all the equipment that are necessary for their proper functioning. (recirculation pumps, spray nozzles, lines for the reinstatement of the fresh water, etc…)

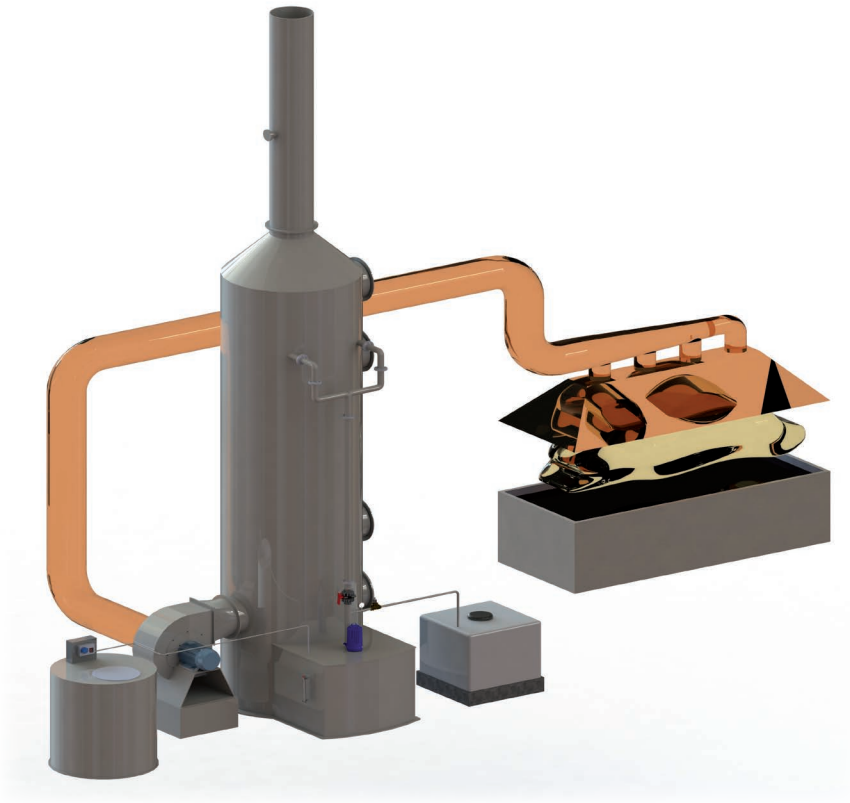

## Different configurations

- **Scrubber venturi**
- **Double-stage scrubber, Triple-stage scrubber**
- **Horizontal scrubber**
- **Customised solutions**

## Benefits

- **Wide range of application, suitable for every type of pollutant**
- **Minimum energy consumption (low pressure drop)**
- **Stability (unwavering pressure drop)**
- **Continuous working (very short maintenance time)**
- **High efficiency, very low operating costs**
- **Low cost of installation, use and maintenance**

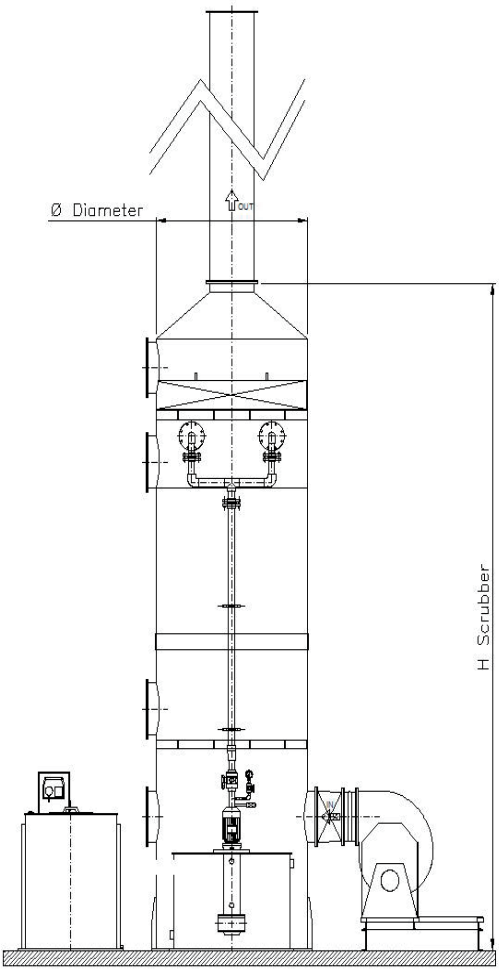


SINGLE-STAGE FLOATING SCRUBBER
flow rate up to min. 90.000 mch
contact time 1 sec
ΔP ≤ 120 mm h²o

| Model | Flow Rate m³/h | ø mm | H mm | Working rate mm |
|---|---|---|---|---|
| SCF-1300 | 20.000 | 1300 | 6500 | 4,19 |
| SCF-1500 | 25.000 | 1500 | 6500 | 3,95 |
| SCF-1600 | 30.000 | 1600 | 6500 | 4,15 |
| SCF-1700 | 35.000 | 1700 | 7500 | 4,30 |
| SCF-1900 | 40.000 | 1900 | 7900 | 3,92 |
| SCF-2000 | 50.000 | 2000 | 7900 | 4,42 |
| SCF-2200 | 60.000 | 2200 | 7900 | 4,38 |
| SCF-2400 | 70.000 | 2400 | 8000 | 4,30 |
| SCF-2600 | 80.000 | 2600 | 8000 | 4,19 |
| SCF-2870 | 90.000 | 2870 | 9200 | 3,87 |

SINGLE-STAGE STATIC SCRUBBER
flow rate up to min. 50.000 mch
contact time 1 sec
ΔP ≤ 80 mm h²o

| Model | Flow Rate m³/h | ø mm | H mm | Working rate mm |
|---|---|---|---|---|
| SCS-400 | 500 | 400 | 3500 | 1,10 |
| SCS-500 | 1.000 | 500 | 3500 | 1,41 |
| SCS-700 | 2.000 | 700 | 4000 | 1,44 |
| SCS-900 | 3.000 | 900 | 4000 | 1,31 |
| SCS-1100 | 4.000 | 1100 | 4500 | 1,17 |
| SCS-1200 | 5.000 | 1200 | 4500 | 1,23 |
| SCS-1400 | 7.500 | 1400 | 4500 | 1,35 |
| SCS-1600 | 10.000 | 1600 | 5500 | 1,38 |
| SCS-1900 | 12.500 | 1900 | 5500 | 1,23 |
| SCS-2000 | 15.000 | 2000 | 5500 | 1,33 |
| SCS-2200 | 17.500 | 2200 | 5500 | 1,28 |
| SCS-2300 | 20.000 | 2300 | 6000 | 1,34 |
| SCS-2600 | 25.000 | 2600 | 6000 | 1,31 |
| SCS-2800 | 30.000 | 2800 | 6500 | 1,35 |
| SCS-2900 | 35.000 | 2900 | 6500 | 1,47 |
| SCS-3300 | 40.000 | 3300 | 7000 | 1,30 |
| SCS-3500 | 45.000 | 3500 | 7000 | 1,30 |
| SCS-3600 | 50.000 | 3600 | 7000 | 1,36 |

## Optional

The plants can be equipped by measuring instruments (pH, redox potential, electrical conductivity,etc…); they can also be equipped with automatic systems for the reinstatement of reagents and discharging system of spent solutions.

## Application

- processing on flexible and or semiflexible plastic material
- chemical, electrochemical and electroplating surface treatment processing
- chemical and pharmaceutical synthesis processing with acid/base emissions or V.O.C
- baking of calcareous materials
- processing of smelting and combustion
- polyurethane or DMF coating processing
- textile finishing processing (heatsetting, singeing, bleaching,etc…)
- generic processing  where are generated VOC and CIV

HE FILTRATION ENGINEERING S.L.

FILTRACION Y DEPURACION DE AIRE

**HE FILTRATION ENGINEERING S.L.**
Pol. Ind. Ibaiondo, nº 4
20120 HERNANI. GIPUZKOA. ESPAÑA
Tel. 943 33 57 18
Fax 943 33 57 13
info@hefiltration.com
**www.hefiltration.com**

Rev 01.14

*A cleaner world.*